Vents

Exterior exhaust vent

- Designed to suit 100mm Ducting
- Includes a midge screen
- UV stable plastic construction

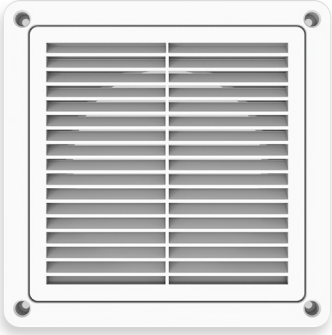

ORDERING INFORMATION

Order code	13538
Description	100 mm Exterior exhaust fan wall vent square
Item Code	VENT/100/EXT/WH/SQ

LINE DRAWINGS

VENT/100/EXT/WH/SQ

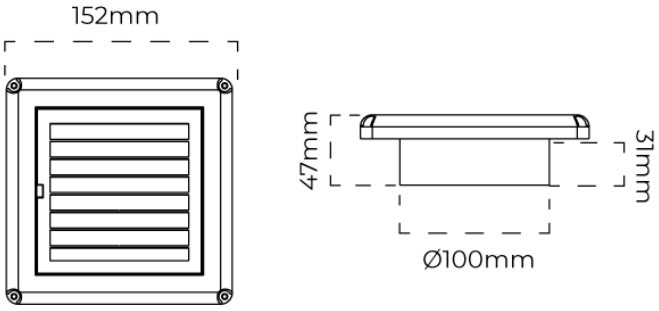

© 2026 Evolt