DUO-SCAN MICROWAVE

360° RECESSED MICROWAVE SECURITY SENSOR

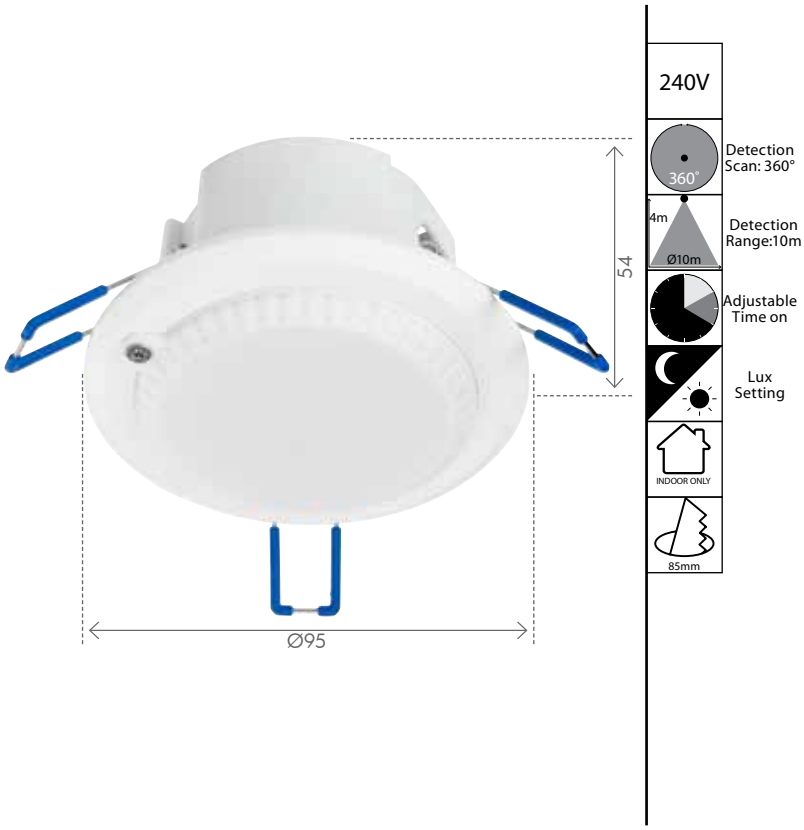

Two individual controls for lighting and exhaust fans
Advanced microwave technology detecting slight motions.
Automatically activated by motion
Ceiling recessed mount
Wide detection area, up to 10m in diameter.
Motion can be detected through plastic, glass and thin non-metal materials
Accurate adjustable time, lux level and detection area via DIP swtiches.
Ideal for bathrooms.

HF system	: 5.8GHz
Lux control level	: <3-2000LUX (adjustable)
Detection distance	: 10m @ 4m ceiling heigh (max)
Time delay (light)	: 5sec / 90sec / 3min / 10min
Time delay (exhaust)	: 5sec / 5min / 10min / 20min
Max Load (light)	: 400W Incandescent Lamp 200W Fluorescent Lamp 100W LED Lamp
Max Load (exhaust)	: 200W max

2 Year Warranty.

Product	Code	Colours
Sensor	**20053/..**	**05** WHITE

EYE 360° MICROWAVE

360° RECESSED MICROWAVE SECURITY SENSOR

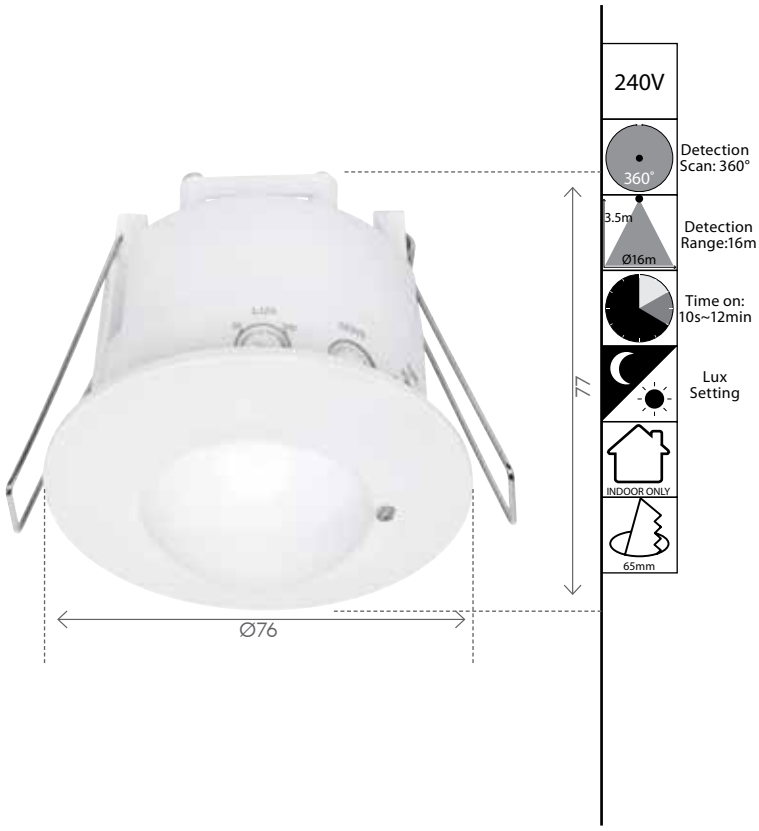

Automatically activated by motion and light level.
Ceiling recessed mount.
Wide detection area, up to 16m in diameter.
Motion can be detected through plastic, glass and thin non-metal materials.
Adjustable time, lux level and detection area.
Reliable 3-wire design.
Indoor use only.

HF system	: 5.8GHz
Installation height	: 1.5-3.5m
Lux control level	: 3-2000LUX (adjustable)
Max Load	: 1200W Incandescent Lamp 300W Fluorscent Lamp 150W LED Lamp

2 Year Warranty.

Product	Code	Colours
Sensor	**20051/..**	**05** WHITE