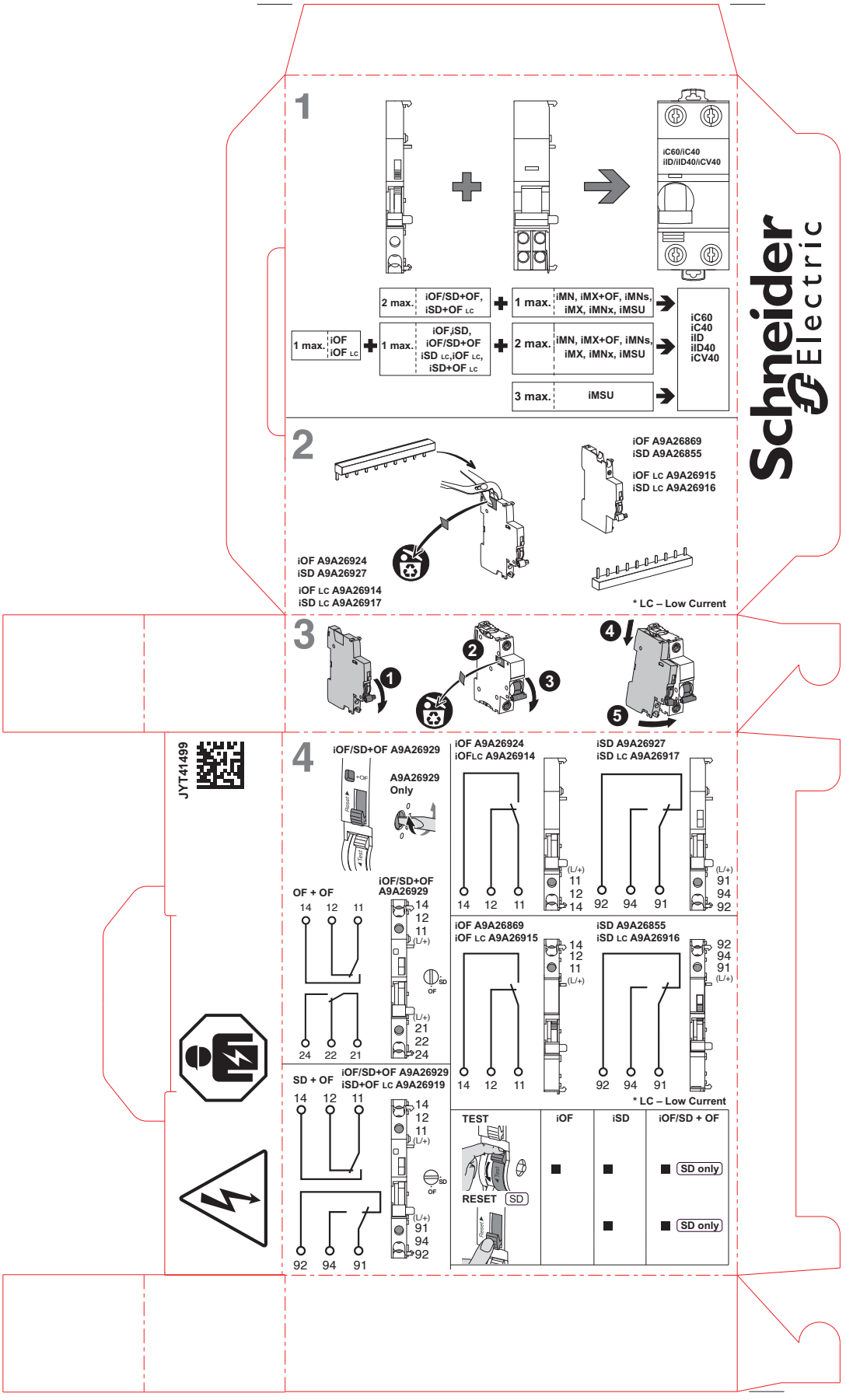

1
iC60/iC40
iID/iID40/iCV40
2 max. iOF/SD+OF, iSD+OF LC
1 max. iMN, iMX+OF, iMNs, iMX, iMNx, iMSU
1 max. iOF iOF LC
1 max. iOF,iSD, iOF/SD+OF iSD LC,iOF LC, iSD+OF LC
2 max. iMN, iMX+OF, iMNs, iMX, iMNx, iMSU
3 max. iMSU
iC60 iC40 iID iID40 iCV40
2
iOF A9A26869
iSD A9A26855
iOF LC A9A26915
iSD LC A9A26916
iOF A9A26924
iSD A9A26927
iOF LC A9A26914
iSD LC A9A26917
* LC – Low Current
3
4
iOF/SD+OF A9A26929
A9A26929 Only
OF + OF
iOF/SD+OF A9A26929
SD + OF
iOF/SD+OF A9A26929
iSD+OF LC A9A26919
iOF A9A26924
iOFLC A9A26914
iSD A9A26927
iSD LC A9A26917
iOF A9A26869
iOF LC A9A26915
iSD A9A26855
iSD LC A9A26916
* LC – Low Current
TEST
RESET SD
iOF
iSD
iOF/SD + OF
SD only
SD only
JYT41499
Schneider Electric