Product datasheet
Characteristics

XCKP2101P16

limit switch XCKP - with rotary head w/o operating lever - 1NC+1NO - snap - M16

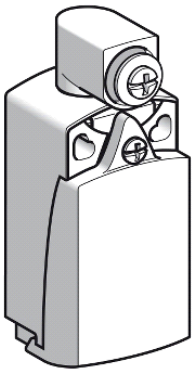

Main

Range of product	OsiSense XC
Series name	Standard format
Product or component type	Limit switch
Device short name	XCKP
Sensor design	Compact
Body type	Fixed
Head type	Rotary head
Material	Plastic
Body material	Plastic
Head material	Zamak
Fixing mode	By the body
Movement of operating head	Rotary
Type of operator	Spring return without operating lever
Type of approach	Lateral approach 2 directions
Number of poles	2
Contacts type and composition	1 NC + 1 NO
Contact operation	Snap action

Complementary

Electrical connection	Screw-clamp terminals, clamping capacity: 1 x 0.34...2 x 1.5 mm²
Cable entry	1 entry tapped for M16 x 1.5 cable gland, cable outer diameter: 4...8 mm
Contacts insulation form	Zb
Positive opening	With
Positive opening minimum torque	0.25 N.m
Minimum torque for tripping	0.1 N.m
Maximum actuation speed	1.5 m/s
Repeat accuracy	0.1 mm on the tripping points with 1 million operating cycles
Contact code designation	Q300, DC-13 (Ue = 250 V, Ie = 0.27 A) conforming to EN/IEC 60947-5-1 appendix A A300, AC-15 (Ue = 240 V, Ie = 3 A) , Ithe = 10 A conforming to EN/IEC 60947-5-1 appendix A
[Ui] rated insulation voltage	500 V degree of pollution 3 conforming to IEC 60947-1 300 V conforming to UL 508 300 V conforming to CSA C22.2 No 14
Resistance across terminals	<= 25 MOhm conforming to IEC 60255-7 category 3
[Uimp] rated impulse withstand voltage	6 kV conforming to IEC 60664 6 kV conforming to IEC 60947-1
Short-circuit protection	10 A by gG cartridge fuse
Electrical durability	5000000 cycles, DC-13, 120 V, 4 W, operating rate: <= 60 cyc/mn, load factor: 0.5 conforming to IEC 60947-5-1 appendix C 5000000 cycles, DC-13, 24 V, 10 W, operating rate: <= 60 cyc/mn, load factor: 0.5 conforming to IEC 60947-5-1 appendix C 5000000 cycles, DC-13, 48 V, 7 W, operating rate: <= 60 cyc/mn, load factor: 0.5 conforming to IEC 60947-5-1 appendix C
Mechanical durability	10000000 cycles
Width	31 mm
Height	65 mm
Depth	30 mm
Product weight	0.115 kg

The information provided in this documentation contains general descriptions and/or technical characteristics of the performance of the products contained herein.
This documentation is not intended as a substitute for and is not to be used for determining suitability or reliability of these products for specific user applications.
It is the duty of any such user or integrator to perform the appropriate and complete risk analysis, evaluation and testing of the products with respect to the relevant specific application or use thereof.
Neither Schneider Electric Industries SAS nor any of its affiliates or subsidiaries shall be responsible or liable for misuse of the information contained herein.

Terminals description ISO n°1	(13-14)NO (21-22)NC

Environment

shock resistance	50 gn (duration = 11 ms) conforming to IEC 60068-2-27
vibration resistance	25 gn (f = 10...500 Hz) conforming to IEC 60068-2-6
IP degree of protection	IP66 conforming to IEC 60529 IP67 conforming to IEC 60529
IK degree of protection	IK04 conforming to EN 50102
electrical shock protection class	Class II conforming to IEC 61140 Class II conforming to NF C 20-030
ambient air temperature for operation	-25...70 °C
ambient air temperature for storage	-40...70 °C
protective treatment	TC
product certifications	CCC CSA UL
standards	EN 60204-1 EN 60947-5-1 IEC 60204-1 IEC 60947-5-1 UL 508 CSA C22.2 No 14

Offer Sustainability

Sustainable offer status	Green Premium product
RoHS (date code: YYWW)	Compliant - since 1002 - Schneider Electric declaration of conformity
REACh	Reference not containing SVHC above the threshold

Dimensions

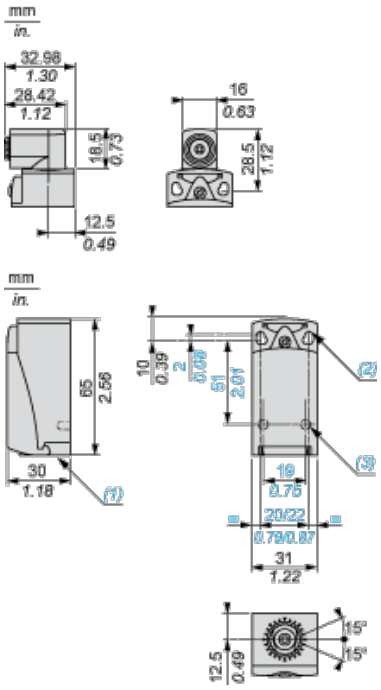

(1) Tapped entry for M16 x 1.5

(2) 2 elongated holes Ø 4.3 x 6.3 mm on 22 mm centres, 2 holes Ø 4.3 on 20 mm centres.

(3) 2 x Ø 3 holes for support studs, depth 4 mm.

Mounting with Cable Entry

Position of Cable Gland

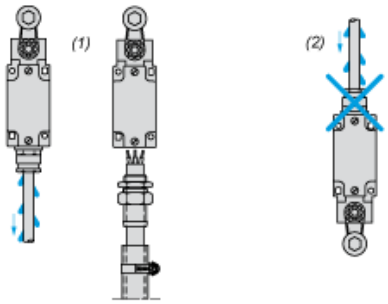

(1) Recommended

(2) To be avoided

Mounting with Rotary Heads and Levers

Type of Cam

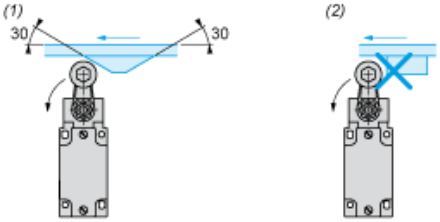

(1) Recommended

(2) To be avoided

Setting-up with Head ZCE01 and ZCE09

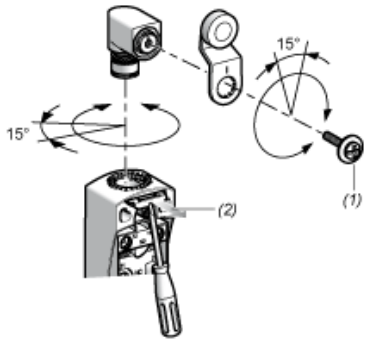

(1) Tightening torque (Min : 1) (Max : 1.5)

(2) Tightening torque (Min : 0.8) (Max : 1.2)

Wiring Diagram

2-pole NC + NO Snap Action

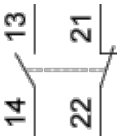

Characteristics of Actuation

Switch Actuation on End

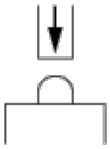

Functionnal Diagram

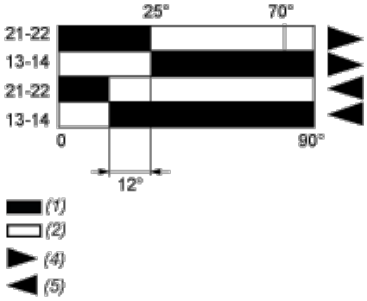

(1) Closed

(2) Open

(4) Tripping

(5) Resetting