LU9GC7

www.schneider-electric.com

W9163955590111

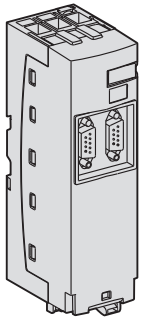

A

mm / in

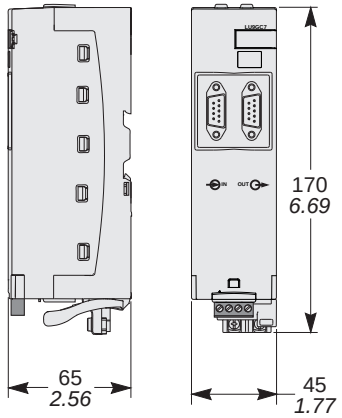

B

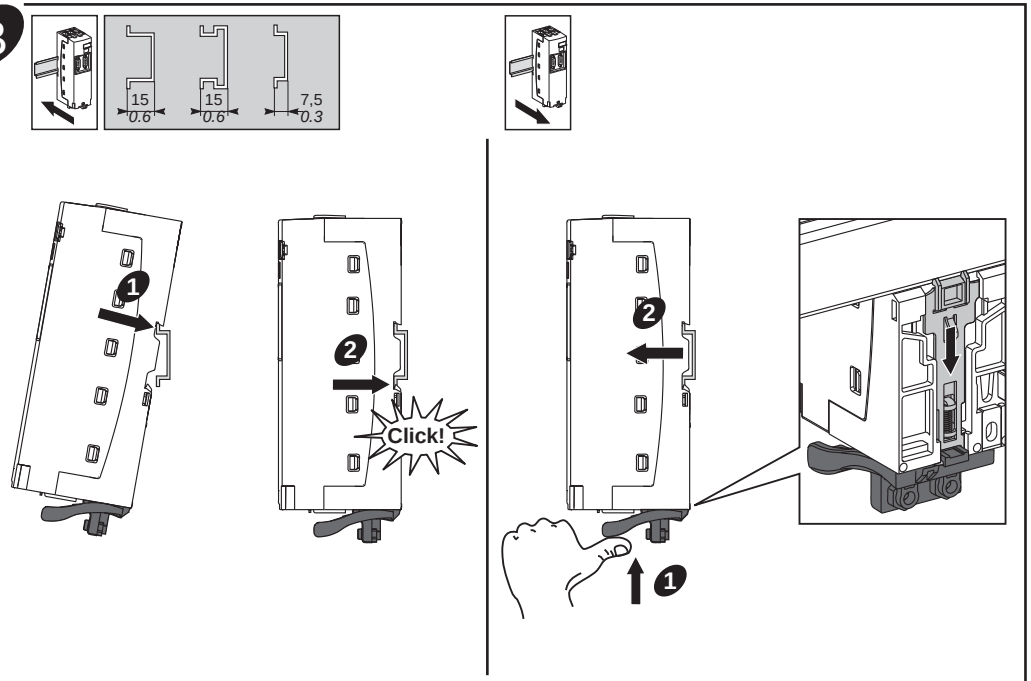

C

mm / in

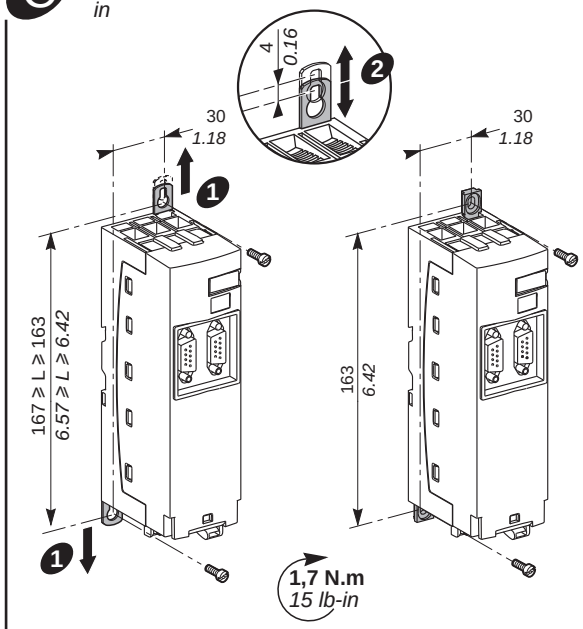

D

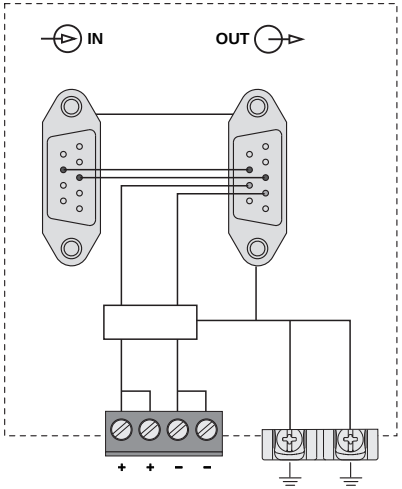

+ + – –	0,25...1,5 mm²		0,2...1,5 mm²	0,2...1 mm²	0,2...1,5 mm²	0,2...1 mm²	7 mm	Ø3,5 mm	Ø3 mm	0,5 N.m
	AWG 24...16		*AWG 24...16*	*AWG 24...18*	*AWG 24...16*	*AWG 24...18*	*0.27 in*	*Ø0.13 in*	*Ø0.11 in*	*4,5 lb-in*
	1...1,5 mm²	1...1,5 mm²	1...2,5 mm²				7 mm	Ø5 mm (Phillips N°1)	Ø3 mm	0,8...1,2 N.m
	AWG 18...16	*AWG 18...16*	*AWG 18...14*				*0.27 in*	*Ø0.19 in.* (Phillips N°1)	*Ø0.11 in*	*10 lb-in*

W9 1639559 0111 A05
04 - 2016
1/2

Schneider Electric Industries SAS
35, rue Joseph Monier
92506 Rueil Malmaison
France

Schneider Electric

E

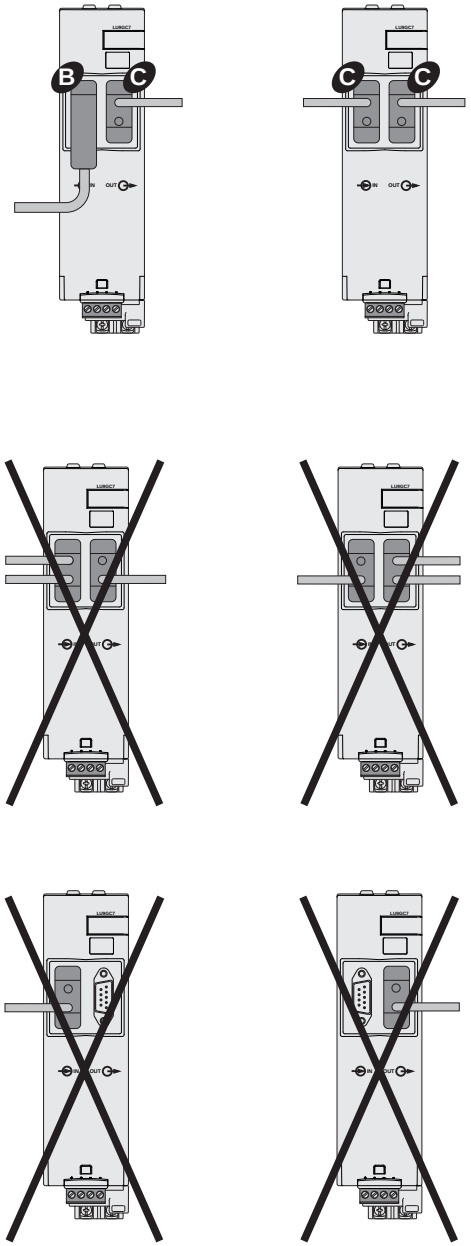
B
C
C
C
IN
OUT

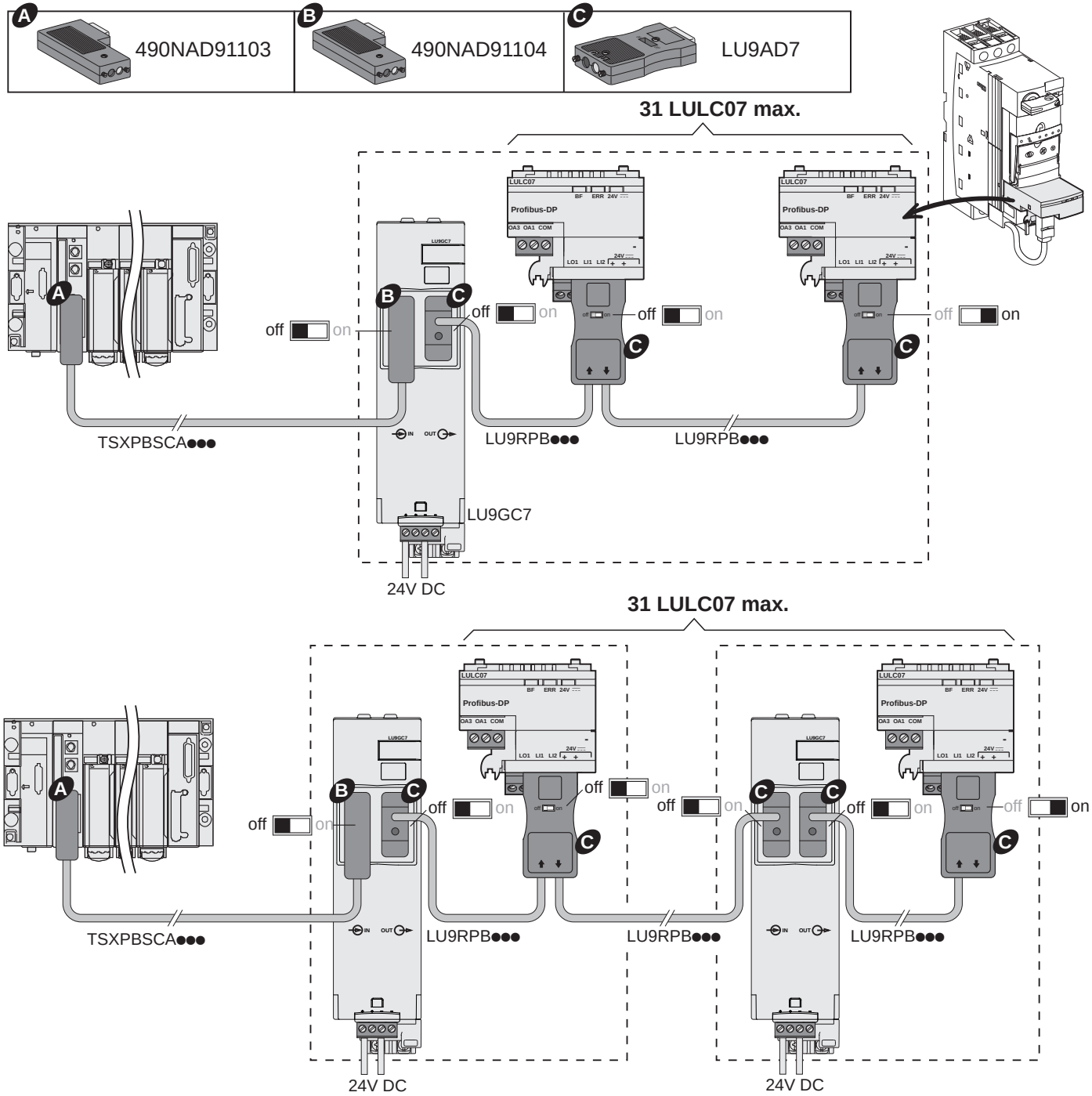
A
490NAD91103
B
490NAD91104
C
LU9AD7
31 LULC07 max.
LULC07
Profibus-DP
BF ERR 24V
OA3 OA1 COM
LO1 LI1 LI2
24V
off
on
TSXPBSCA●●●
LU9RPB●●●
LU9RPB●●●
LU9GC7
24V DC
31 LULC07 max.
TSXPBSCA●●●
LU9RPB●●●
LU9RPB●●●
LU9RPB●●●
24V DC
24V DC