Standard Product in Western Australia

Specifications
- Standard Length 6.0 metres.
- Overall height 93 mm
- Cable laying depth 75 mm

Surface Finish

Available Finish	Code
Hot Dip Galvanised	H
Stainless Steel	S

Note
- Stainless steel products are manufactured against firm orders only and are non returnable.

	Ordering Code		
Cable Laying Width W mm	Hot Dip Galvanised	Stainless Steel	Width Overa mm
150	N2L150RIH	N2L150RIS	154
300	N2L300RIH	N2L300RIS	304
450	N2L450RIH	N2L450RIS	454
600	N2L600RIH	N2L600RIS	604
900	N2L900RIH	N2L900RIS	904

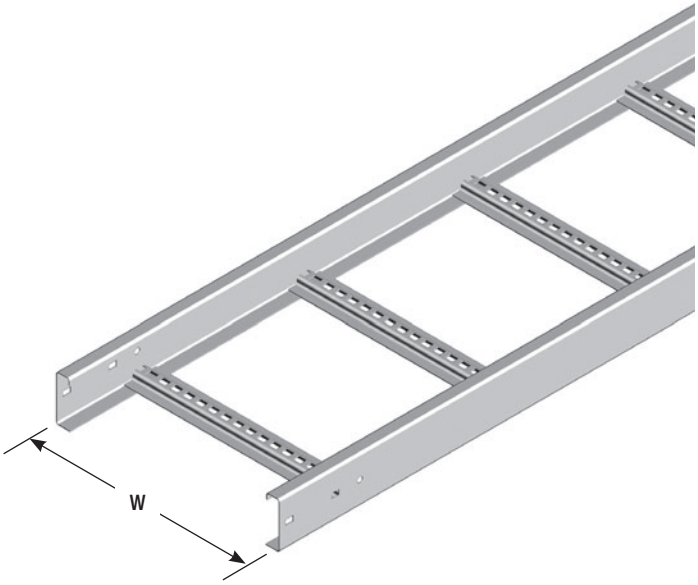

Nema 2 Cable Ladder

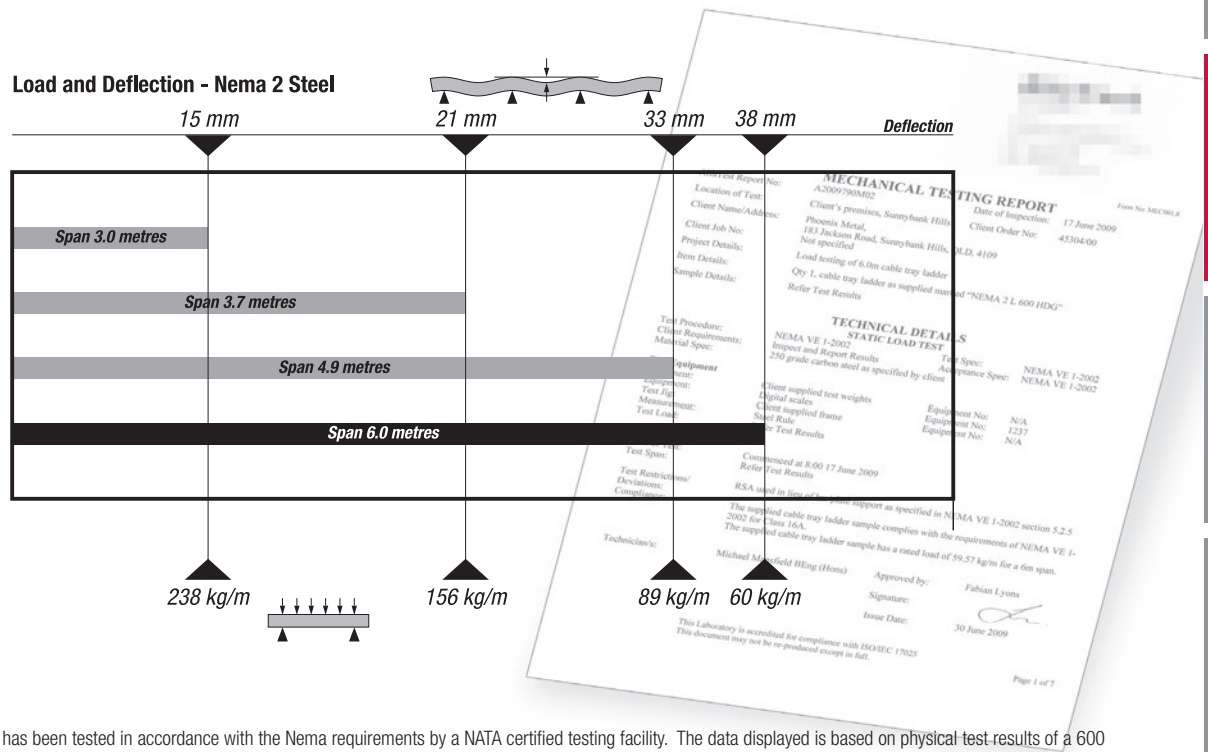

Nema 2 Cable Ladder has been tested in accordance with the Nema requirements by a NATA certified testing facility. The data displayed is based on physical test results of a 600 wide section and may vary for other widths. The Deflections have been provided as a guide based on continuous spans, and cannot be applied to end spans. Data provided assumes that the installation will be carried out in accordance with Nema VE2, non compliance may affect the overall product performance.

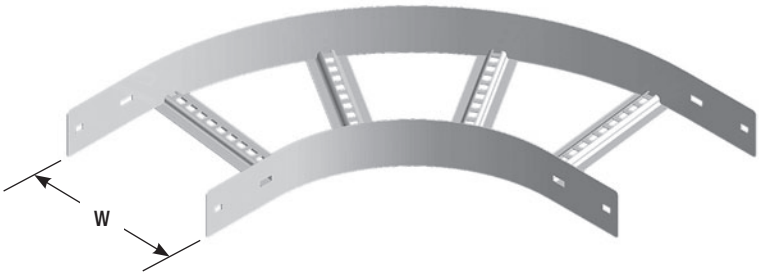

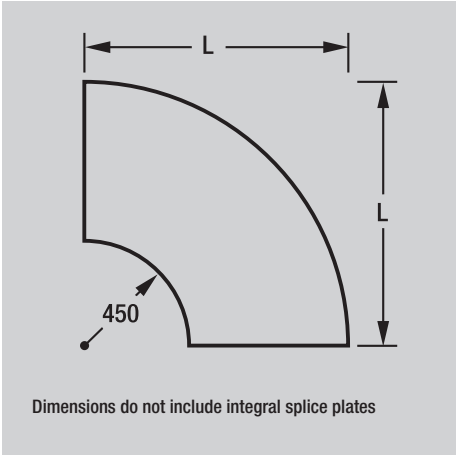

Ordering Code	Width W mm	Length L mm
N2B1504	150	600
N2B3004	300	750
N2B4504	450	900
N2B6004	600	1050
N2B9004	900	1350

H Hot Dip Galvanised
S Stainless Steel

Order fasteners separately for installation. 8 x Splice Bolts (SBH) & 8 x Splice Nuts (SNH) required.

Non standard radius fittings can be manufactured against firm orders, and are non returnable.

Stainless Steel is only manufactured against firm orders and is non returnable.

NEMA 2 Cable Ladder - Bend

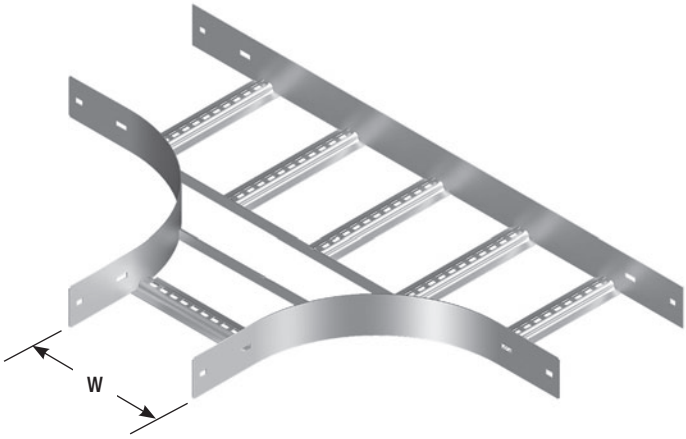

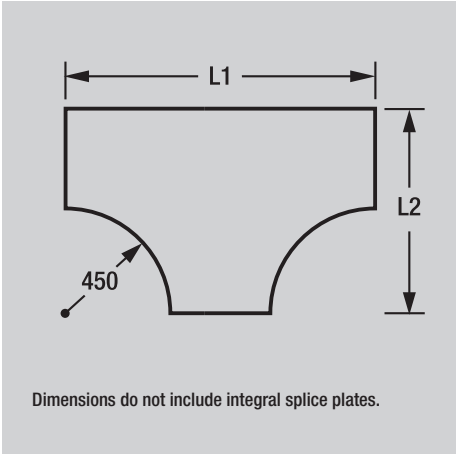

Ordering Code	Width W mm	Length L1 mm	Length L2 mm
N2T1504	150	1050	600
N2T3004	300	1200	750
N2T4504	450	1350	900
N2T6004	600	1500	1050
N2T9004	900	1800	1350

H Hot Dip Galvanised
S Stainless Steel

Order fasteners separately for installation. 8 x Splice Bolts (SBH) & 8 x Splice Nuts (SNH) required.

Non standard radius fittings can be manufactured against firm orders, and are non returnable.

Stainless Steel is only manufactured against firm orders and is non returnable.

NEMA 2 Cable Ladder - Tee

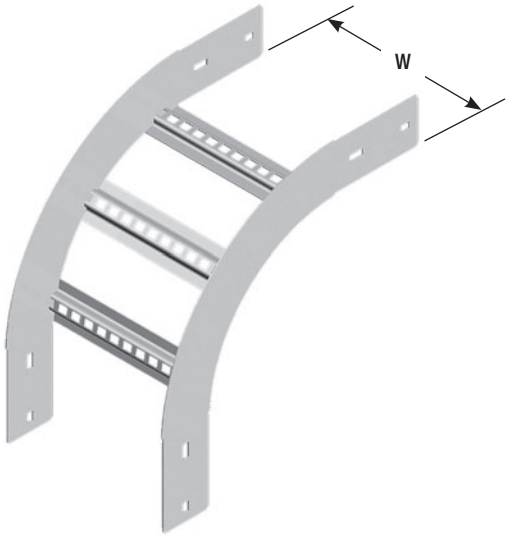

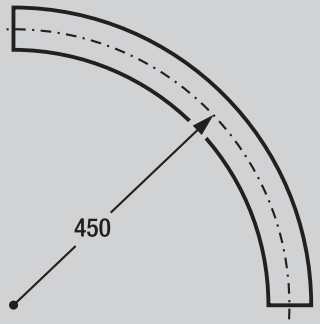

Dimensions do not include integral splice plates.

Order fasteners separately for installation. 8 x Splice Bolts (SBH) & 8 x Splice Nuts (SNH) required.

Non standard radius fittings can be manufactured against firm orders, and are non returnable.

Stainless Steel is only manufactured against firm orders and is non returnable.

Ordering Code	Width W mm
N2ER1504	150
N2ER3004	300
N2ER4504	450
N2ER6004	600
N2ER9004	900

H Hot Dip Galvanised
S Stainless Steel

NEMA 2 Cable Ladder - External Riser

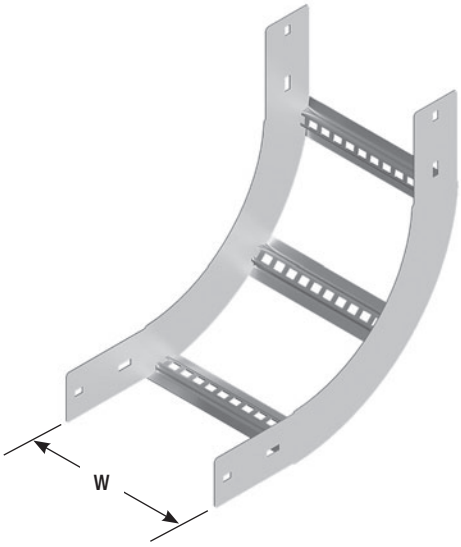

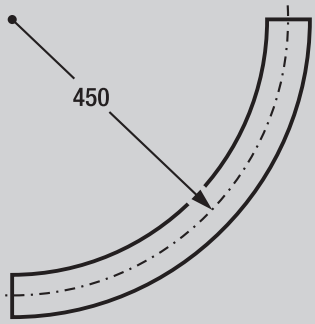

Dimensions do not include integral splice plates.

Order fasteners separately for installation. 8 x Splice Bolts (SBH) & 8 x Splice Nuts (SNH) required.

Non standard radius fittings can be manufactured against firm orders, and are non returnable.

Stainless Steel is only manufactured against firm orders and is non returnable.

Ordering Code	Width W mm
N2IR1504	150
N2IR3004	300
N2IR4504	450
N2IR6004	600
N2IR9004	900

H Hot Dip Galvanised
S Stainless Steel

NEMA 2 Cable Ladder - Internal Riser

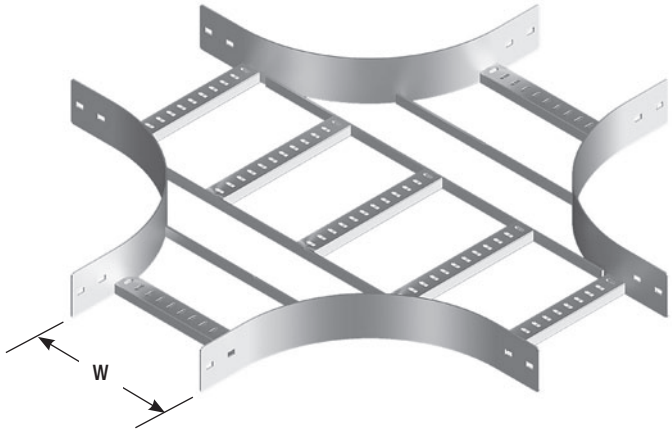

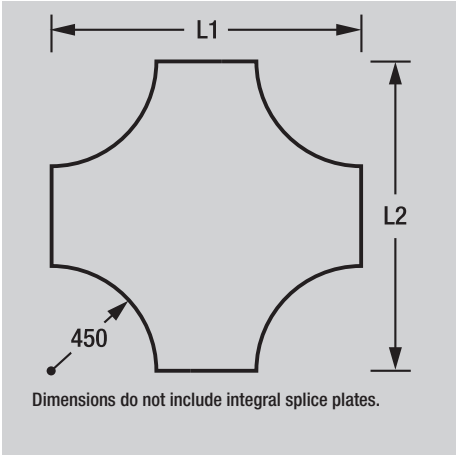

Order fasteners separately for installation. 16 x Splice Bolts (SBH) & 16 x Splice Nuts (SNH) required.

Non standard radius fittings can be manufactured against firm orders, and are non returnable.

Stainless Steel is only manufactured against firm orders and is non returnable.

Ordering Code	Width W mm	Length L1 mm	Length L2 mm
N2C1504 _	150	1050	1050
N2C3004 _	300	1200	1200
N2C4504 _	450	1350	1350
N2C6004 _	600	1500	1500
N2C9004 _	900	1800	1800

H Hot Dip Galvanised
S Stainless Steel

NEMA 2 Cable Ladder - Cross

Order fasteners separately for installation. 8 x Splice Bolts (SBH) & 8 x Splice Nuts (SNH) required.

All Reducers are manufactured against firm orders, and are non returnable.

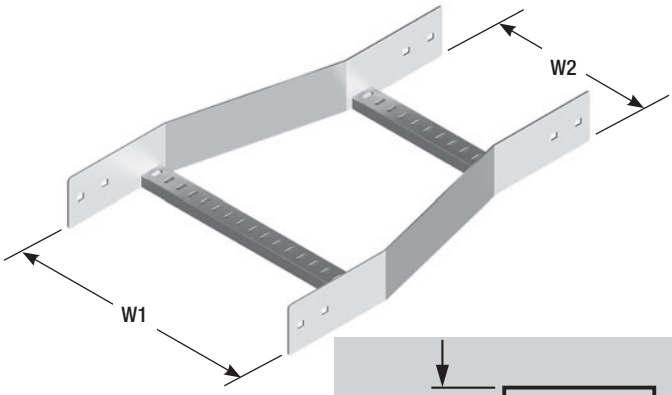

Ordering Code	Width W1 mm	Width W2 mm
N2SR300150 _	300	150
N2SR450150 _	450	150
N2SR450300 _	450	300
N2SR600150 _	600	150
N2SR600300 _	600	300
N2SR600450 _	600	450
N2SR900150 _	900	150
N2SR900300 _	900	300
N2SR900450 _	900	450
N2SR900600 _	900	600

H Hot Dip Galvanised
S Stainless Steel

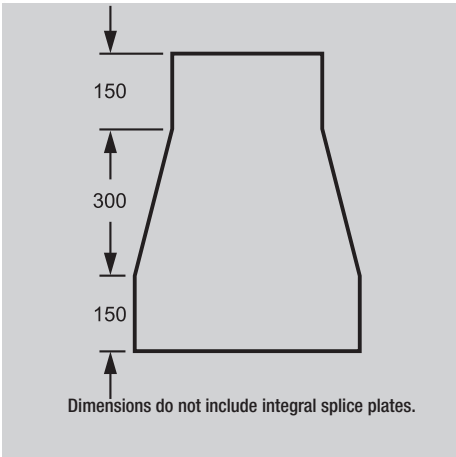

NEMA 2 Cable Ladder - Straight Reducer

Order fasteners separately for installation.

8 x Splice Bolts (SBH) & 8 x Splice Nuts (SNH) required.

All Reducers are manufactured against firm orders, and are non returnable.

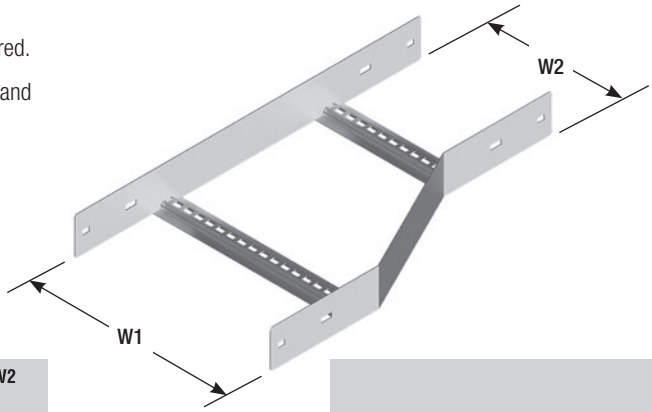

Ordering Code	Width W1 mm	Width W2 mm
N2LHR300150 _	300	150
N2LHR450150 _	450	150
N2LHR450300 _	450	300
N2LHR600150 _	600	150
N2LHR600300 _	600	300
N2LHR600450 _	600	450
N2LHR900150 _	900	150
N2LHR900300 _	900	300
N2LHR900450 _	900	450
N2LHR900600 _	900	600

H Hot Dip Galvanised
S Stainless Steel

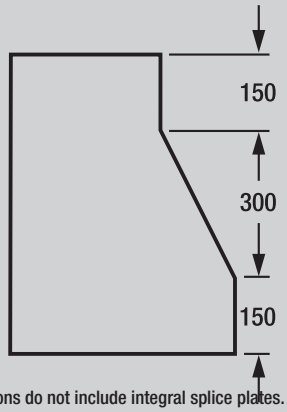

Dimensions do not include integral splice plates.

NEMA 2 Cable Ladder - Left Hand Reducer

Order fasteners separately for installation.

8 x Splice Bolts (SBH) & 8 x Splice Nuts (SNH) required.

All Reducers are manufactured against firm orders and are non returnable.

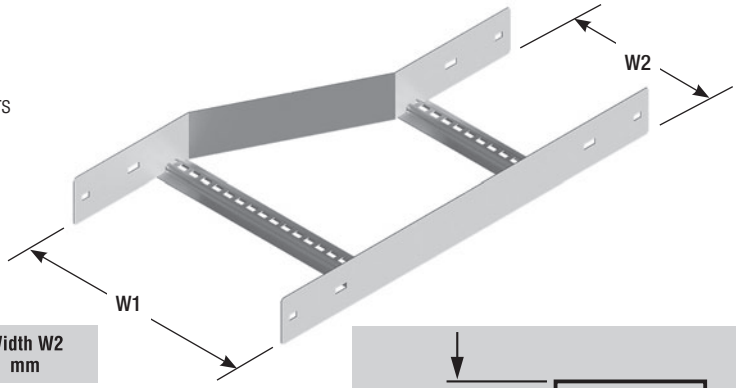

Ordering Code	Width W1 mm	Width W2 mm
N2RHR300150 _	300	150
N2RHR450150 _	450	150
N2RHR450300 _	450	300
N2RHR600150 _	600	150
N2RHR600300 _	600	300
N2RHR600450 _	600	450
N2RHR900150 _	900	150
N2RHR900300 _	900	300
N2RHR900450 _	900	450
N2RHR900600 _	900	600

H Hot Dip Galvanised
S Stainless Steel

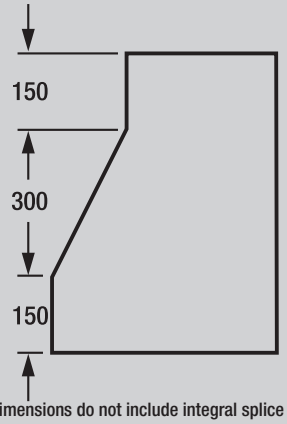

Dimensions do not include integral splice plates.

NEMA 2 Cable Ladder - Right Hand Reducer

Ordering Code: N2S

Note - two required per joint. Order splice bolts & nuts separately, SBH or SBS and SNH or SNS.

Ordering Code N2S _

- **H** Hot Dip Galvanised
- **S** Stainless Steel

NEMA 2 Splice

Ordering Code: N2SE

Note - two required per joint. Order splice bolts & nuts separately, SBH or SBS and SNH or SNS.

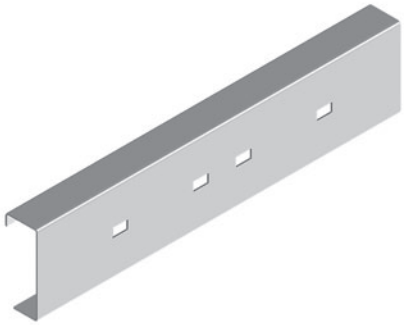

Ordering Code N2SE _

- **H** Hot Dip Galvanised
- **S** Stainless Steel

NEMA 2 External Splice

Ordering Code: N2VS

Note - two required per joint. Order splice bolts & nuts separately, SBH or SBS and SNH or SNS.

Ordering Code N2VS _

- **H** Hot Dip Galvanised
- **S** Stainless Steel

NEMA 2 Vertical Splice

Ordering Code: N2HS

Note - two required per joint. Order splice bolts & nuts separately, SBH or SBS and SNH or SNS.

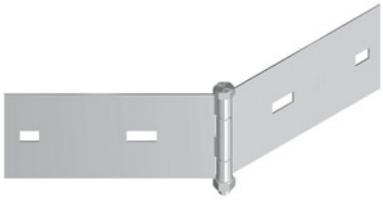

Ordering Code N2HS _

- **H** Hot Dip Galvanised
- **S** Stainless Steel

NEMA 2 Horizontal Splice